we create solutions

aquasant

TECHNICAL DOCUMENTATION

Safety Empty Liquid Sensor

AF42 LL H 300 AKK ANSI2" ExG

- Non-sensitive for vapor, droplets, foam
- Independent of viscosity, el. conductivity, refractive index, color
- No moving parts
- No adjustment needed
- Electro-optical sensor

Use

With the sensor AF42 liquids as for example mineral oils, edible oils, liquids in the food industry, acids, bases, solvents etc. can be monitored. Especially made for the use in Ex-area and for decreasing the risk of possible water pollution.

Application

The sensor, manufactured in Alloy C22 as the standard version, is applied in Acids liquids, waste water treatment plants (sterilization), sewage plants, reactors, pipes, filling devices. As dry-run protection for pumps, monitoring of liquid levels of any kind, notably at complex and difficult ambient factors.

Serial Number.: TAG Number.:

Model code: AF 42 LL H 300 AKK ANSI 2"

AF	|	Aquasant electro optical sensor
42	|	Safety empty liquid sensor with coupler electronics in connection head
LL	|	fiber optic cable with ext. coupler electronic
H	|	Sensor material wetted parts: Alloy C22, graphite, Duran glass
L	|	Total length: 300 mm / switch point: 203 mm (8”) from lower edge of flange
AK	|	Connection head aluminum, blue powder coated, Viton seal, IP 65 acc. EN 60529
K	|	Cable gland PM M20 x 1.5 blue Cable clamping range ø 8-11 mm
ANSI	|	Flange ANSI 2" 150 LBS acc. ASTM A-182, ASME B16.5, RF, 316L with PTFE plated

SVTI-authorization (BUVAL) KVU-n°.: Special filling protection 302.004.15 / Leak-detection system 321.003.15
ATEX Ex-protection: SEV 16 ATEX 0151 X; Ex II 1/2G Ex ia op is IIC T4 Ga/Gb, CE 1254

The Liquid detector head must be installed protected against impact and friction

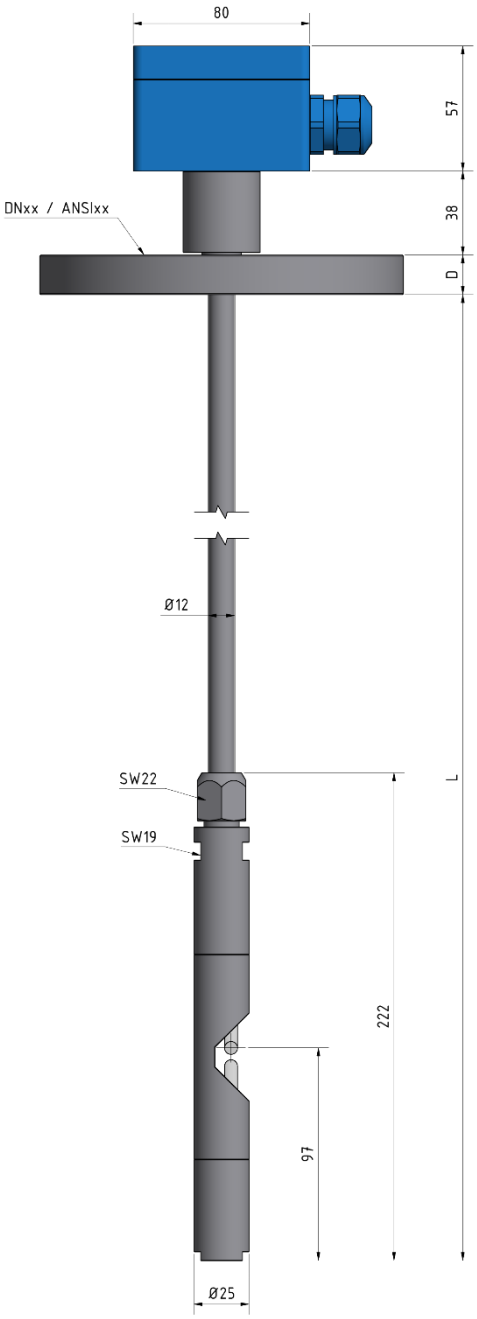

Technical data

Type Sensor with precision optics, in Alloy C22 with cast aluminum connection housing

Protection class IP65

Sealing Clamping ring ø 12 mm screw connection PTFE paste

Sensor glass rod sealing Graphite

Sensor material Alloy C22/ Sensor tip Duran-glass rod

Temperature range -30 ... +120 °C media

Cleaning temperature: 210 °C, max. 10 min. unpressurized, sterilizable

Pressure: -1 bar up to max. 20 bar

Measuring principle Electro-optical

Connection to AS1, AS6, AS51, AS83, AS8, AN3,

Use: Outdoor / indoor

Installation position: vertical

Ex-protection sensor nominal values
$U_i \leq 7.2$ V, $I_i \leq 96$ mA, $L_i = 0$, $C_i = 0$

Maximum cable length 1000 m / 3 x 0,75 mm^2

With clear liquids the sensor can be mounted without any additional adjustments. In case of suspensions, emulsions or highly fumigated liquids, depending on the measurement range, the control unit AS 83-E24 with sensitivity setting is used.

Article-Nr. 10 14 19

Technical data about integrated VE9 electronics

The electro-optical liquid sensor has to be wired as 3-wire technology. If there is an existing 2-pin cable system at the tank farm, the VE9 measuring electronics can be used with conversion to 2-wire cables.

Design type
Electronic board, lacquered with terminal

Mounting
Protection housing with mounting holes, slide-in electronics attached with 2 screws M4x8, screw hole spacing 105 mm

Installation
Linear conversion of a conductance range into a normed digital signal

Function
Oscillator for sensor circuit and transformation from 3- to 2-wire system to trasmit the normed digital signal to the AS9

Use
No setting necessary, plug & process

Dimensions
Square version Height x Width x Length 32 x 50 x 110 mm

Weight electronic
35 g

Ex-power supply / connection wiring
Shielded two-wire connection 0.75 mm^2 to all evaluation devices with cable length up to 2000 m

Transfer signal
Impulse parcel, superimposed on the supply current

Nominal data of the supply voltage

Rate data Ex ia IIC only for connection to aquasant® Typ AS9 *

Circuit with the following maximum output values

$U_i \leq$	7,2 V	$I_i \leq$	135.0 mA
$C_i =$	1.2 uF	$L_i =$	0 mH

Circuit with the following maximum output values

		IIC	IIB
$U_o \leq$	7,2 V	C_o =0.86 µF	C_o = 6.1.0 µF
$I_o \leq$	89.0 mA	L_o = 5.0 mH	L_o = 20.0 mH

Measuring voltage/current
Loaded with measuring electronics VE9
U ~ 7.0 V I ~ 130,0 mA

Ambient temperature
–20 …+60 °C

Storage temperature
–30 …+80 °C, ideal +20 °C

Certification
II 2(1) G Ex ia [ia Ga] IIC T4 Gb
RL 2014/34/EU
Inspection report n°: 17-Ex-0017.01 with extension 1
Unit can be supplied without Ex-protection

Intrinsically save Ex-connection:
Measurement electronics LW9 in protected housing
EMV-tested, STS 024 report NR. 990102WS
corresponds to EN 1127-1 : 2011
EN 60079-0:12+A11:13
EN 60079-11:12 / EN 60079-26:15

Measuring system

The measuring loop consists of the AF*sensor, with connection head and the control unit AS1* in the non Ex-zone. The cable length for Ex ia application is max. 1000 m.

Measuring system with 2-wire cable VE9

The measuring loop consists of AF*-sensor, with integrated or remote on site measuring electronics VE9 in an aluminum housing 125 x 85 x 59 mm and the control unit AS9*or AN9 in the non Ex-one. The cable length for Ex ia application is max. 2000 m.

Function

Based on the law of refraction the IR-light beam is optically totally reflected in a 90° glass cone in gas (angle of incidence α is larger than the refracted angle αR). Due to the twofold total reflection the IR-light beam is detected back at the receiver, which is interpreted as an empty signal.
If the probe tip is immersed into liquid the IR-light beam is no longer totally reflected at the surface and the beam passes into the liquid. Consequently if the IR-light beam is interrupted, detection of the full level is displayed.

Mounting directions

- Installation from top to bottom mounted hanging on the pole
- During installation the sensor has to be handled carefully
- The el.opt. sensors of type AF*BV*, AKK or AKS with aluminum head have to be installed that they are protected from shock and abrasion
- Consider and avoid electrostatic charge on types AF*P1*, S, BV with teflon, polyamide or polyester housing. Warning : electrostatic charge !
- Internal installation guidelines always have to be followed and suitable sealing be used.
- Observe internal safety regulations for open tanks
- Ambient temperature: max. allowed temperature in the connection head must not exceed +80 °C
- Function tests have to be conducted with mounted probe

Disassembly instructions

- Empty tank and flush with water according to operating instructions (observe internal safety regulations)
- Disconnect electrical connections. Dismount sensor
- Data sheets for personal safety purpose need to be added with repair shipments to aquasant®.

Electrical directions

- Wiring must comply with the circuit and grounding diagram
- Connections to VE9 clamps 1/2, protected against polarity reversal, suitable for wire cross section 0.2 – 1.5 mm^2
- The connecting cable has to suit the demands at the measuring circle
- Housing lid in [Ex ia] zone can be opened under live-line working
- Output signal of AS9 unit is a pulse modulated signal $U_0 \leq 7.2$ V

Basic circuit diagram

Probe connection to evaluation unit VE9 an aquasant® AS* surface-mounted housing or 19″-rack plug in

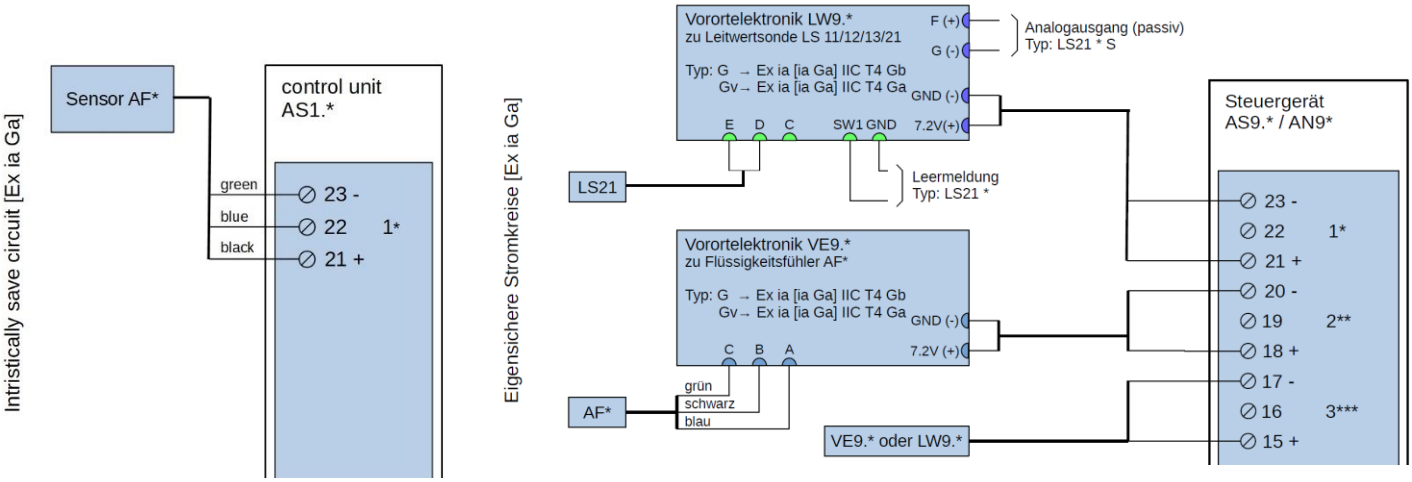

Certificates

Explosion protection (ATEX)
EC-type examination SEV 16 ATEX 0151 X
- Ex-certification according to directive 2014/34 EU
- Confidential test report no.: 16-Ex-082.01

CE-mark
The probe fulfills the legal requirements according to the EC-directives. CE 1254

Aquasant Messtechnik AG | Postfach 107 | Hauptstrasse 22 | 4416 Bubendorf | Switzerland
T: +41 61 935 50 00 | info@aquasant-mt.com | www.aquasant-mt.com